FEATURE TABLE		
ITEM	QTY	DESCRIPTION
A	1	GROUNDING EMBOSS
B	4	Ø.28 MOUNTING HOLE
C	8	½, ¾ CONC. K.O.
D	8	¾, 1 CONC. K.O.
E	2	1, 1¼ CONC. K.O.

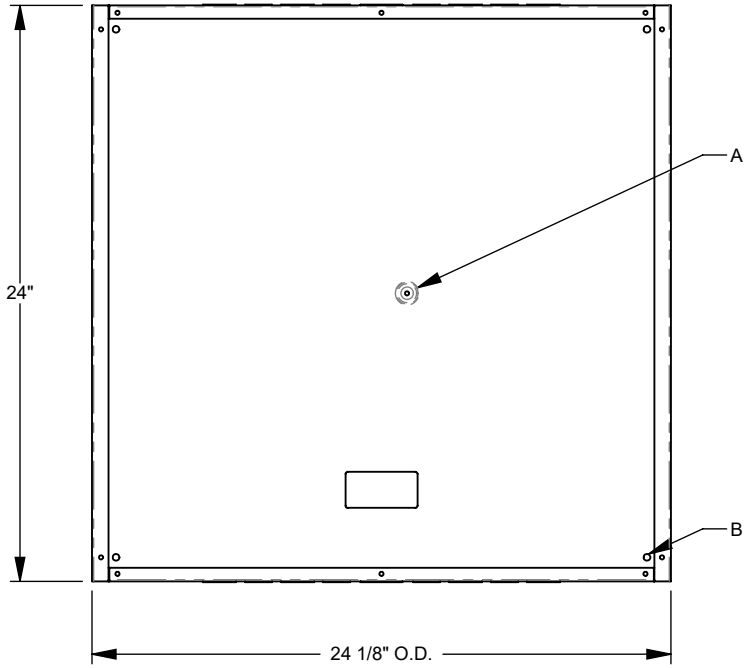

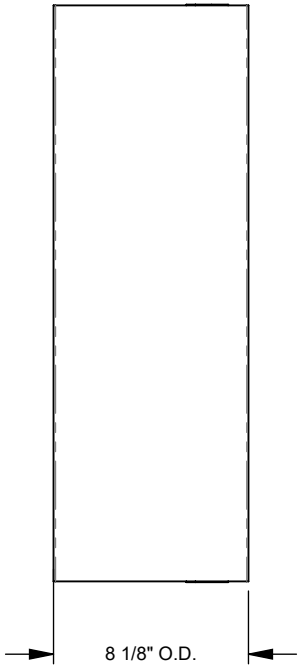

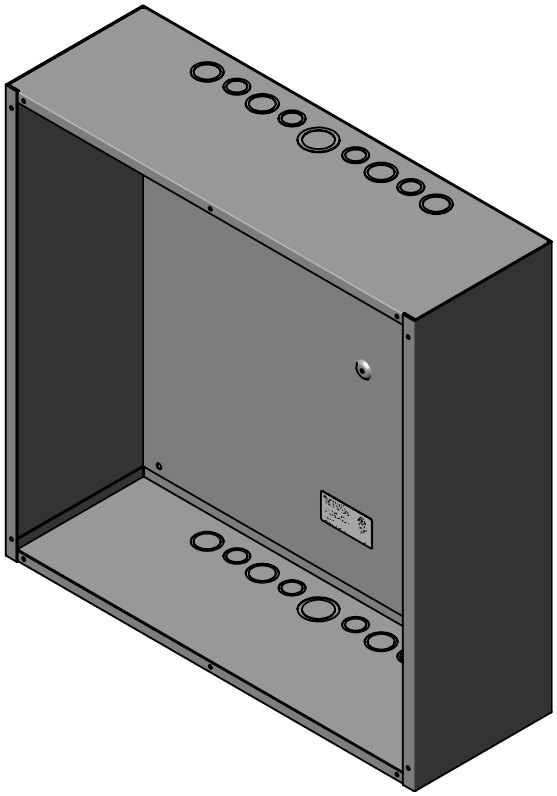

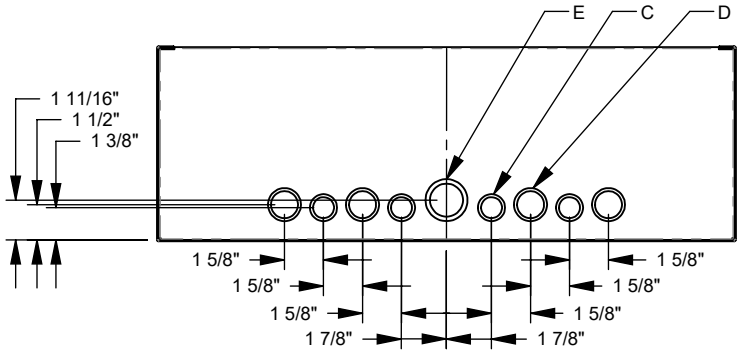

MILBANK®
ENERGY AT WORK

All dimensions are +/- 1/16".
Drawing views are not to scale.

Version:

1

Please consult serving utility for their requirements prior to ordering or installing, as specifications and approvals vary by utility, and may require local electrical inspector approval. All installations must be installed by a licensed electrician and must comply with all national and local codes, laws and regulations. Milbank reserves the right to make changes in specifications and features shown without notice or obligation.